AVR Transistor Tester

PCB 2014-07 by Fish8840 (Designed by weiweitm)
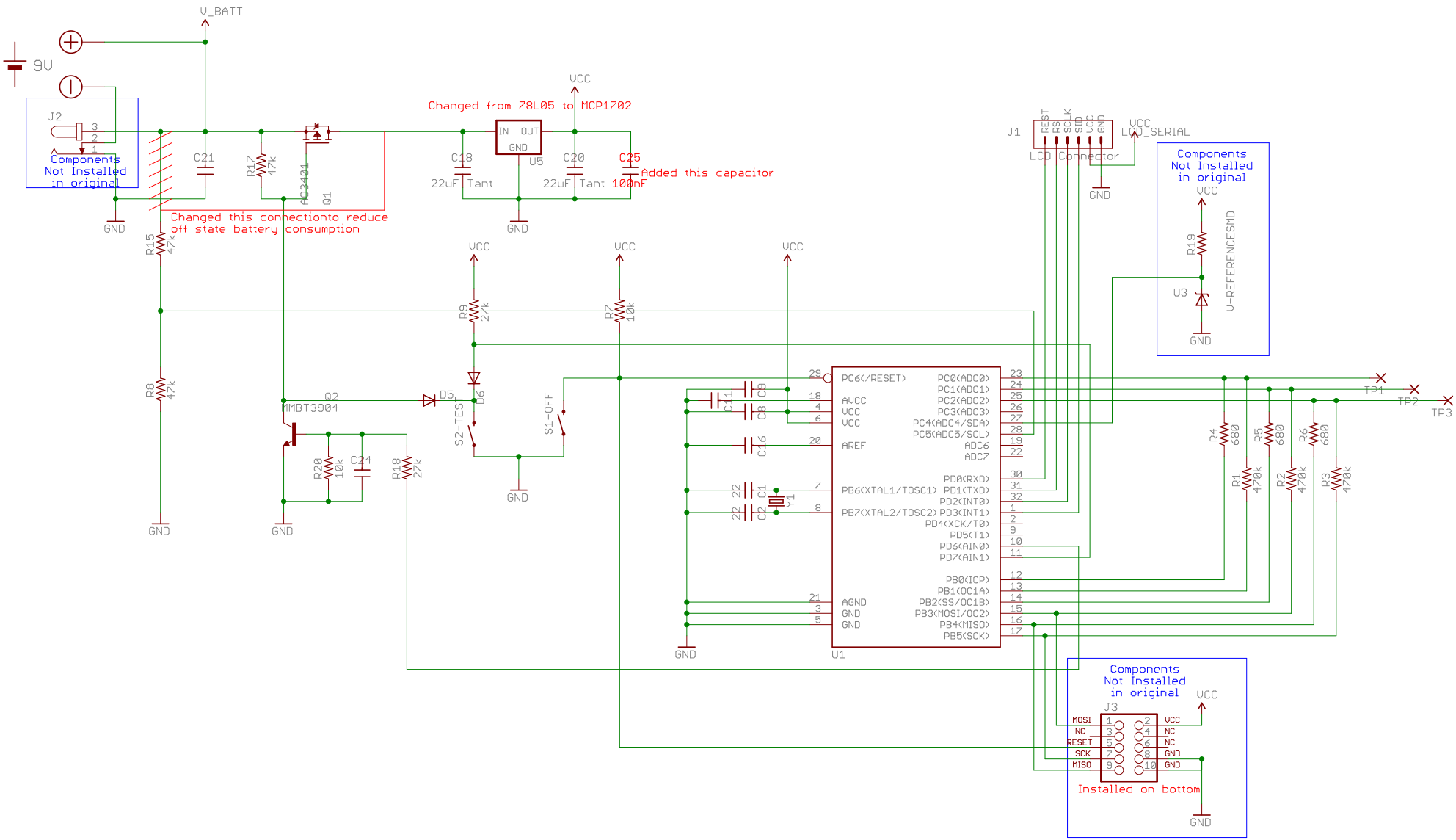
Documented 2014-09-24