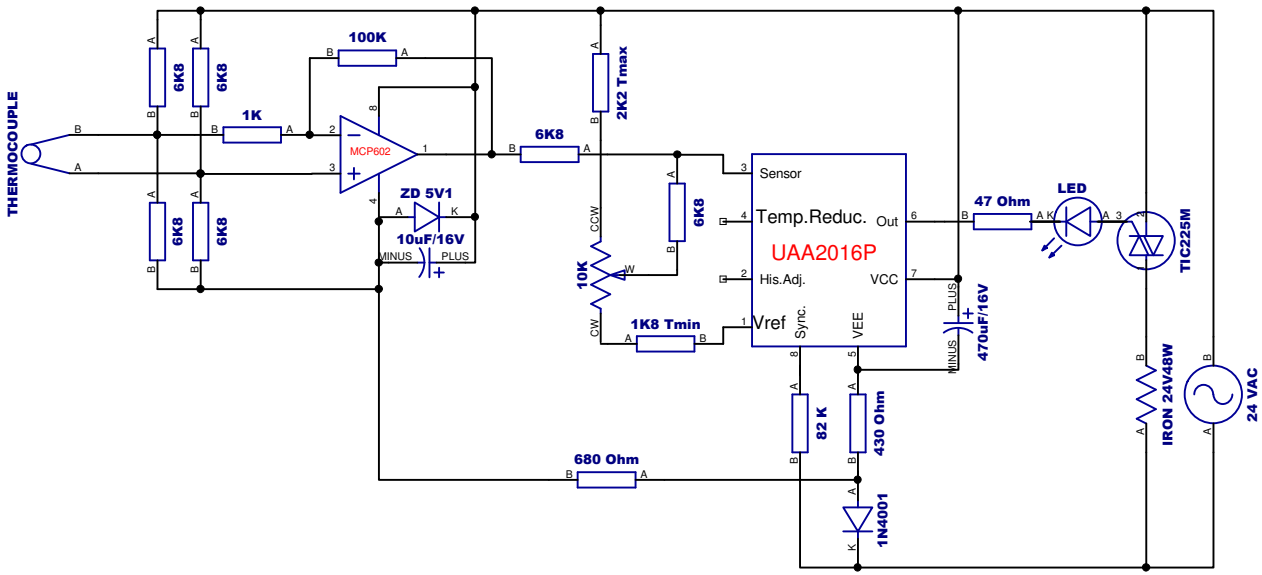Termostat PENSOL SL10