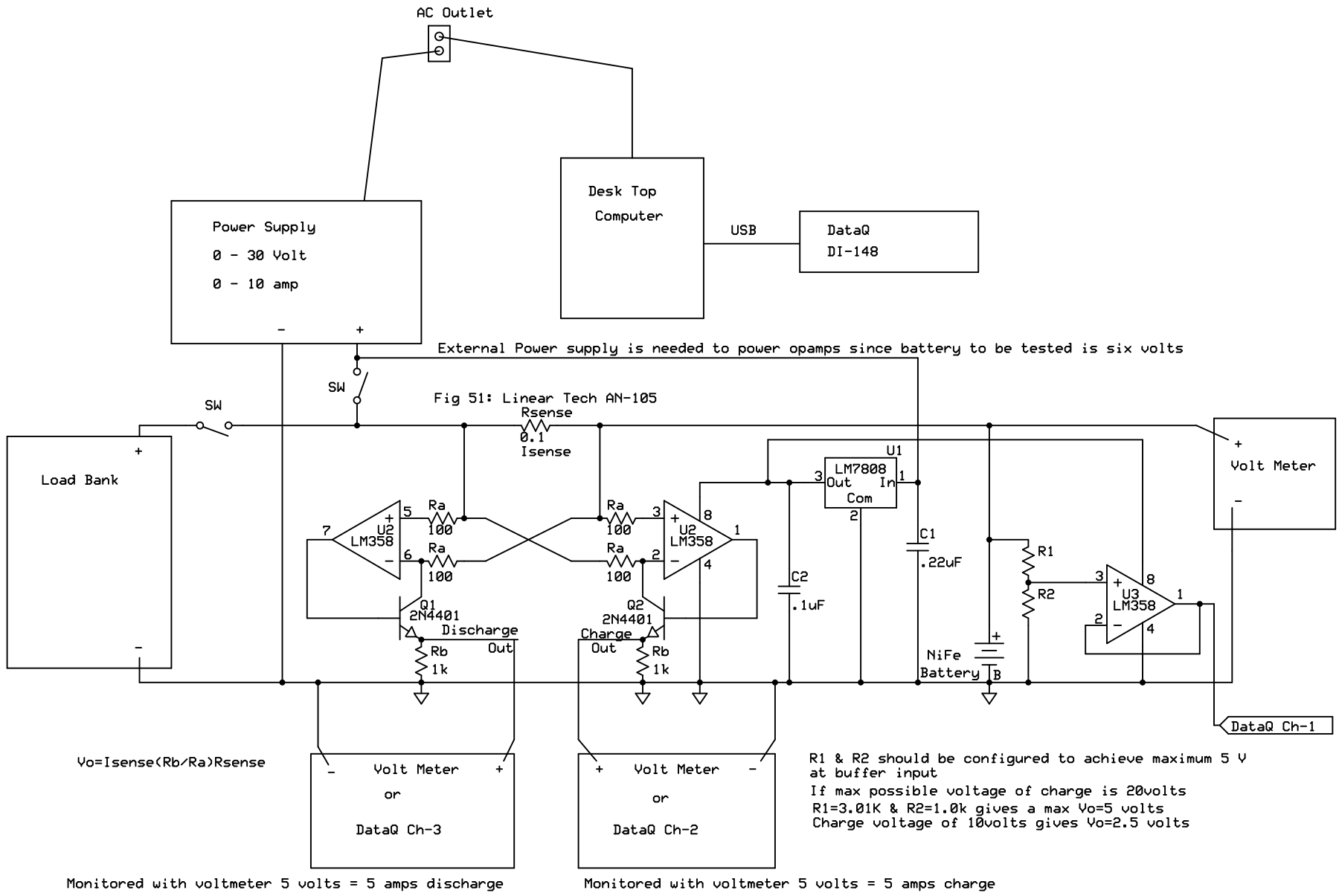

12VDC_Power		
Current Monitor Charge/Discharge		
Dan Nicoson	Rev 1.0 12/31/2016	Page # 1