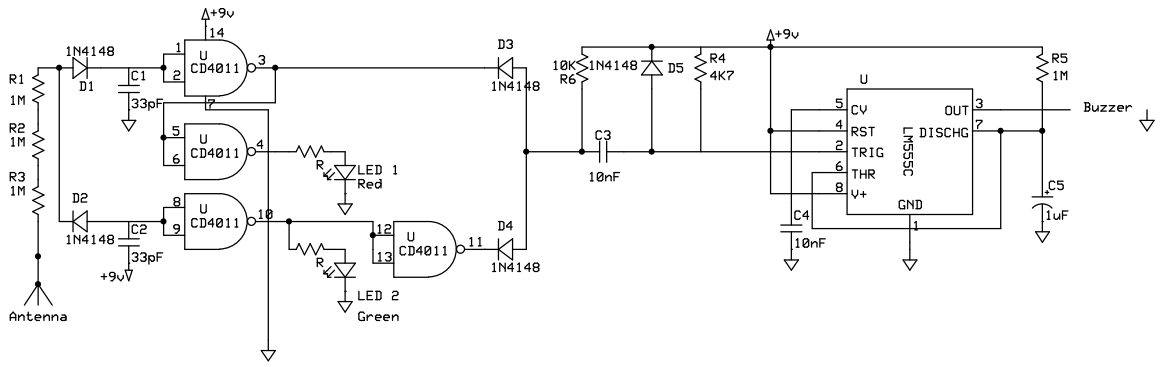

Moving Charge Sensor

Adam W	Rev 2b 05/12/2009	